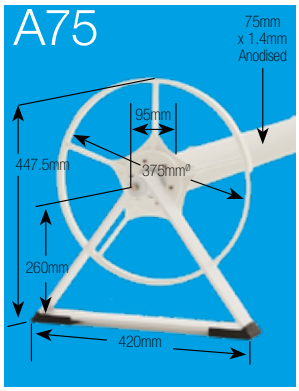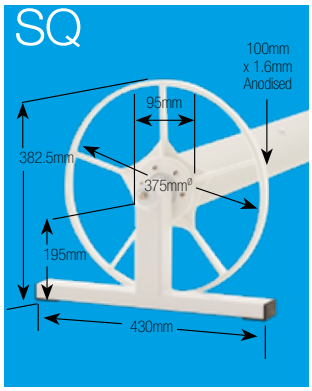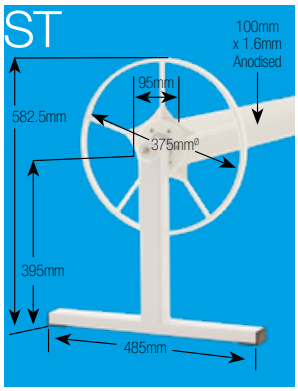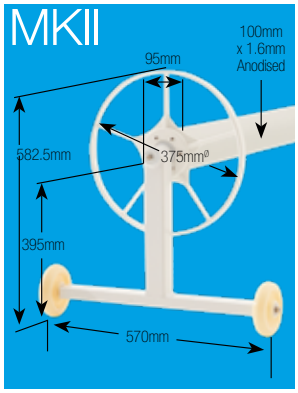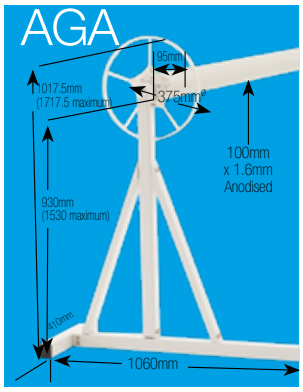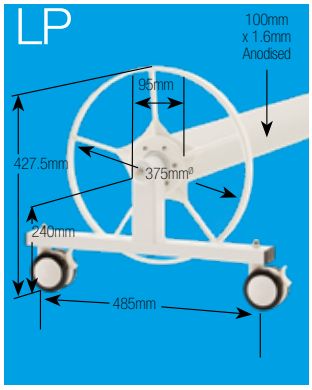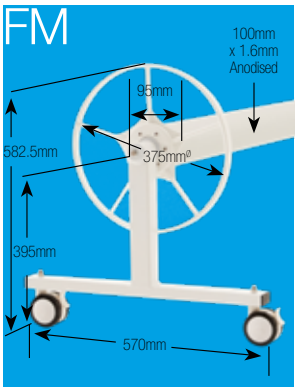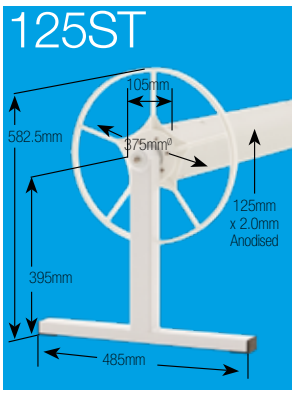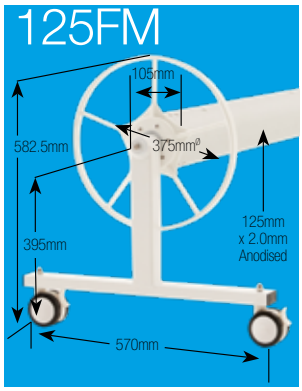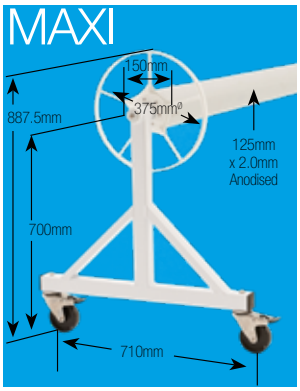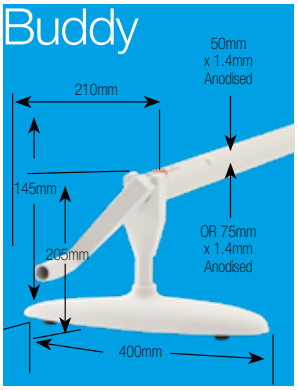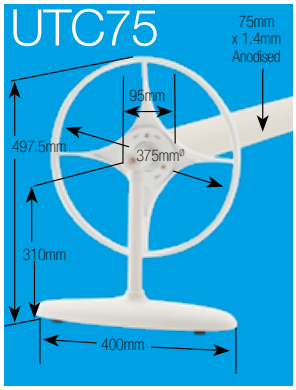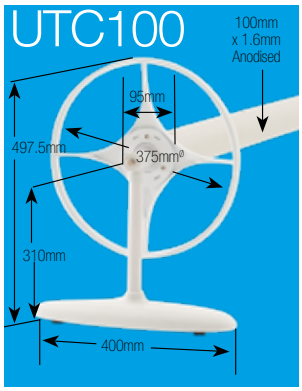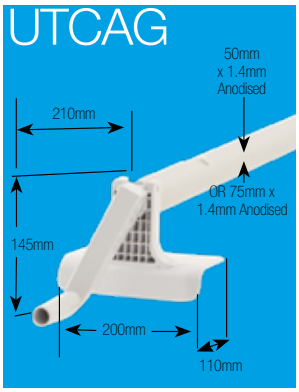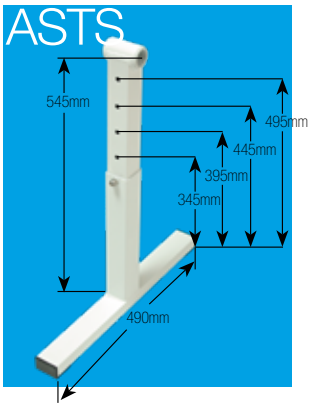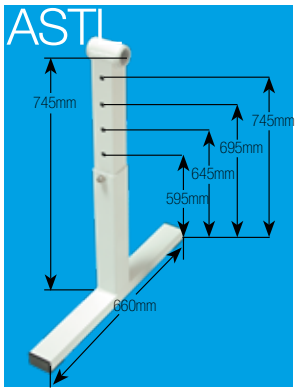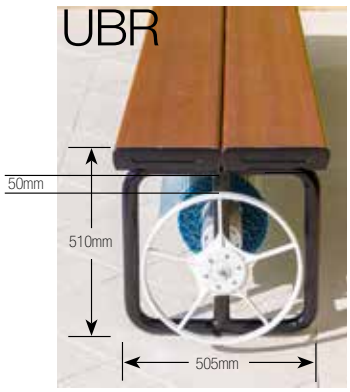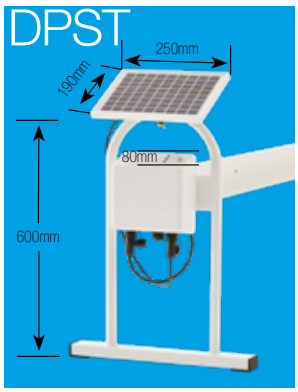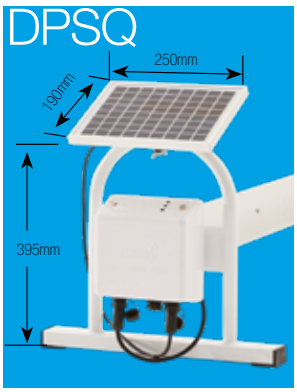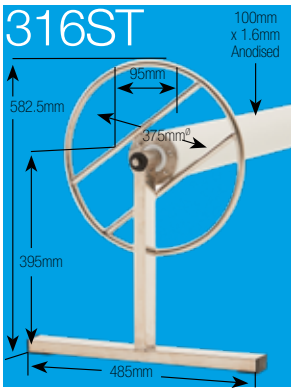ROLLER DIMENSIONS